WR13AF Datasheet

https://www.DiGi-Electronics.com

DiGi Electronics Part Number	WR13AF-DG
Manufacturer	NKK Switches
Manufacturer Product Number	WR13AF
Description	SWITCH ROCKER SPDT 15A 125V
Detailed Description	Rocker Switch SPDT 15A (AC/DC) 125 V Panel Mount, Snap-In

This model WR13AF is available at DiGi Electronics.

DiGi Electronics offers a global database of semiconductor and electronic component datasheets.

We welcome your inquiries regarding pricing, lead time, or other product-related questions.

Request a Quote

Datasheet Search

Tel: +00 852-30501935

RFQ Email: Info@DiGi-Electronics.com

DiGi is a global authorized distributor of electronic components.

Purchase and inquiry

Manufacturer Product Number:	Manufacturer:
WR13AF	NKK Switches
Series:	Product Status:
WR	Active
Mounting Type:	Circuit:
Panel Mount, Snap-In	SPDT
Switch Function:	Current Rating (Amps):
On-Off-On	15A (AC/DC)
Voltage Rating - AC:	Voltage Rating - DC:
125 V	30 V
Actuator Type:	Color - Actuator/Cap:
Concave (Curved)	Black
Actuator Marking:	Illumination Type, Color:
No Marking	-
Illumination Voltage (Nominal):	Termination Style:
-	Quick Connect - 0.250" (6.3mm)
Ingress Protection:	Features:
IP67 - Dust Tight, Waterproof	Epoxy Sealed Terminals
Panel Cutout Dimensions:	Operating Temperature:
Rectangular - 34.20mm x 17.20mm	-25°C ~ 85°C
Approval Agency:	Mechanical Life:
EN, UL	30,000 Cycles
Electrical Life:	Base Product Number:
10,000 Cycles	-

Environmental & Export classification

RoHS Status:	Moisture Sensitivity Level (MSL):
ROHS3 Compliant	1 (Unlimited)
REACH Status:	ECCN:
REACH Unaffected	EAR99
HTSUS:	
8536.50.9065	

General Specifications

Electrical Capacity (Resistive Load)

Power Level: 15A @ 125/250V AC or 15A @ 30V DC

Other Ratings

Contact Resistance: 10 milliohms maximum for solder lug, screw & quick connect terminal models
30 milliohms maximum for wire lead terminal models
Insulation Resistance: 200 megohms minimum @ 500V DC
Dielectric Strength: 1,250V AC minimum between contacts for 1 minute minimum
3,750V AC minimum between contacts & case for 1 minute minimum
Mechanical Life: 30,000 operations minimum
Electrical Life: 15,000 operations minimum for circuit 11 and 12 models
10,000 operations minimum for circuit 13, 15, 18, 19 models
Angle of Throw: 24°

Materials & Finishes

Rocker: Phenylene oxide
Outer Housing: Polyamide (UL94V-0)
Inner Case: Melamine (UL94V-0)
Cover for Wire Lead Models: Glass fiber reinforced polyamide (UL94V-0)
Flange Gasket: Polychloroprene rubber
Movable Contactor: Copper with silver plating
Movable Contacts: Silver alloy plus copper with silver plating
Stationary Contacts: Silver alloy plus copper with silver plating
Terminals: Brass with tin plating
Wire Lead Covers: Heat resistant polyvinyl chloride (Leads are AWG 14)

Environmental Data

Operating Temp Range: –25°C through +85°C (–13°F through +185°F)
Humidity: 90 ~ 95% humidity for 96 hours @ 40°C (104°F)
Vibration: 10 ~ 55Hz with peak-to-peak amplitude of 1.5mm traversing the frequency range & returning in 1 minute; 3 right angled directions for 2 hours
Shock: 50G (490m/s^2) acceleration (tested in 6 right angled directions, with 5 shocks in each direction)
Front Panel Seal: IP67 of IEC60529, dust tight & water protected during temporary immersion for all models
Behind Panel Seal: IP60 of IEC60529, dust tight but not water protected for solder lug, screw & quick connect models
IP67 of IEC60529, dust tight & water protected during temporary immersion for wire lead models

Installation

Soldering Time & Temp: Manual Soldering: See Profile A in Supplement section.
Cleaning: Hand clean locally using alcohol based solution.

Standards & Certifications

Flammability Standards: UL94V-0 outer housing, inner case, & outer cover on wire lead models
UL: **File No. E44145 - Recognized only when ordered with marking on switch.**
Add "/U" or "/CUL" to end of part number to order UL recognized switch.
All models approved at 15A @ 125/250V AC & 15A @ 30V DC.
EN: **No. 61058-1**
WR11 & WR12 models meet European Norm for 3mm contact gap to prevent contact welds.
Wiring Material Standards: UL AWM 1015 Recognized at Flammability VW-1.
Temperature Range –20°C ~ +105°C; Maximum Load 600V; AWG 14.
CSA TEW 105 Certified at Temperature Range –20°C ~ +105°C; Maximum Load 600V.

Distinctive Characteristics

Single unit construction of the flange and outer housing gives added protection from environmental elements.

Specially designed contact mechanism for breaking light welds.

Minimal contact bounce achieved with specially designed interlocked switching mechanism.

Heat resistant resin used for outer housing, inner case, and cover on wire lead models meets UL94V-0 flammability standard and provides high arc and tracking resistance.

Available with solder lug, screw, quick connect, and wire lead terminations.

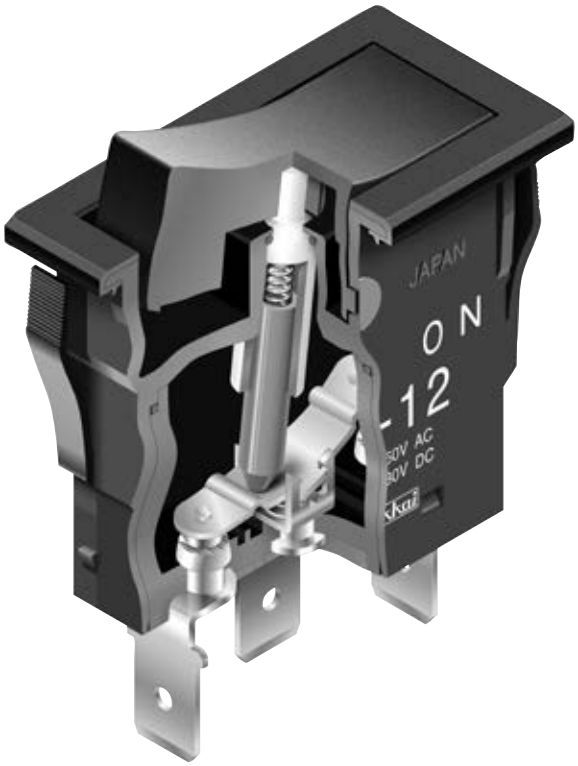

Sealed Construction Meets IP60 & IP67 Standards

Solder lug, screw, and quick connect terminal models meet IP67 of IEC60529 Standards at front panel (dust tight and water protected for temporary immersion, patent pending). Behind panel standard is IP60 (dust tight but not water protected).

Wire lead models conform fully to IP67 of IEC60529 Standards at front and behind panel (dust tight and water protected for temporary immersion). Switch base is epoxy sealed and covered by an outer case for further protection from dust and water. (Switches cannot be operated under water. Contact factory for further details regarding operating environment.)

Actual Size

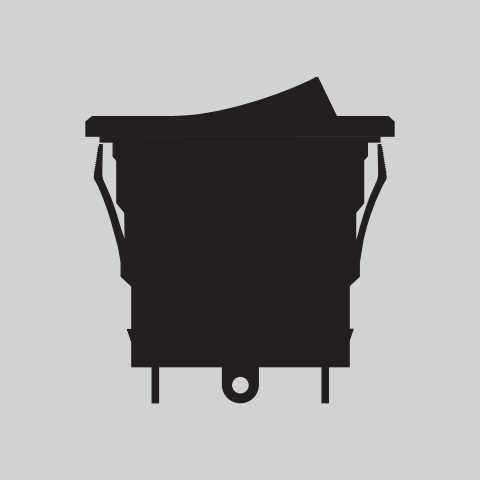

Series WR

Environmentally Sealed Rockers

TYPICAL SWITCH ORDERING EXAMPLE

WR 1 2 B S

Poles	
1	SPST SPDT

Circuits			
1	ON	NONE	OFF
2	ON	NONE	ON
3	ON	OFF	ON
5	ON	NONE	(ON)
8	(ON)	OFF	(ON)
9	ON	OFF	(ON)
( ) = Momentary			

Rockers	
A	Black
* B	Ivory

* Contact Factory for Quick Connect with Ivory Rocker

Terminals	
S	Solder Lug with Epoxy Seal
SN	Solder Lug without Epoxy Seal
T	Screw Lug with Epoxy Seal
TN	Screw Lug without Epoxy Seal
F	.250″ (6.35mm) Quick Connect with Epoxy Seal
FN	.250″ (6.35mm) Quick Connect without Epoxy Seal
L	Wire Lead

IMPORTANT:

Switches are supplied without UL & cULus marking unless specified.
UL & cULus recognized only when ordered with marking on the switch.
Specific models, ratings and ordering instructions are noted on the General Specifications page.

DESCRIPTION FOR TYPICAL ORDERING EXAMPLE

WR12BS

Environmentally Sealed Rockers

Series WR

POLES & CIRCUITS

		Rocker Position ( ) = Momentary			Connected Terminals			Throw & Schematics
Pole	Model	Down	Center	Up	Down	Center	Up	Note: Terminal numbers are not actually on wire lead models.
SP	**WR11**	ON	NONE	OFF	1a-1b	OPEN	OPEN	SPST
SP	**WR12** **WR13** **WR15** **WR18** **WR19**	ON ON ON (ON) ON	NONE OFF NONE OFF OFF	ON ON (ON) (ON) (ON)	1-1b	OPEN	1-1a	SPDT

TYPICAL SWITCH DIMENSIONS

Solder Lug Terminals

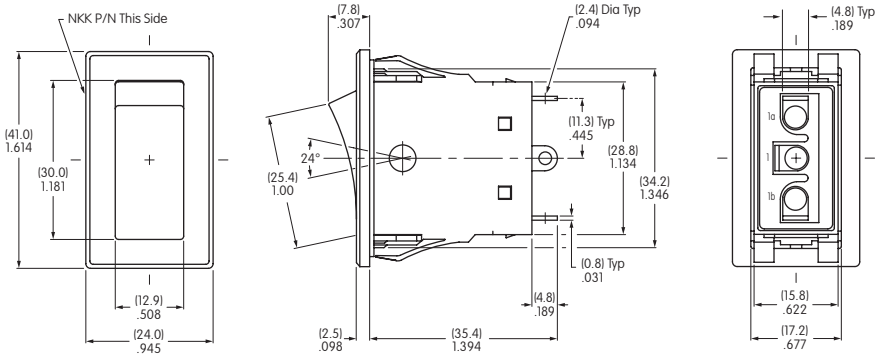

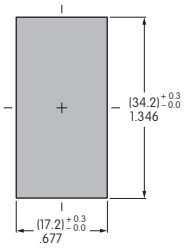

WR11 model does not have terminal 1.

Panel Thickness
.039" ~ .157"
(1.0mm ~ 4.0mm)

WR12AS

Screw Lug Terminals

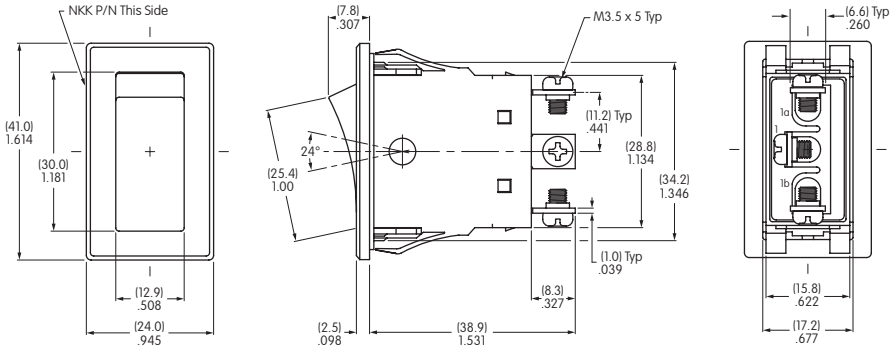

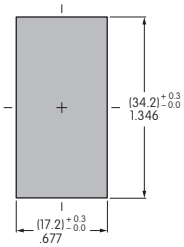

WR11 model does not have terminal 1.

Panel Thickness
.039" ~ .157"
(1.0mm ~ 4.0mm)

WR12AT

Series WR

Environmentally Sealed Rockers

TYPICAL SWITCH DIMENSIONS

.250″ (6.35mm) Quick Connect Terminals

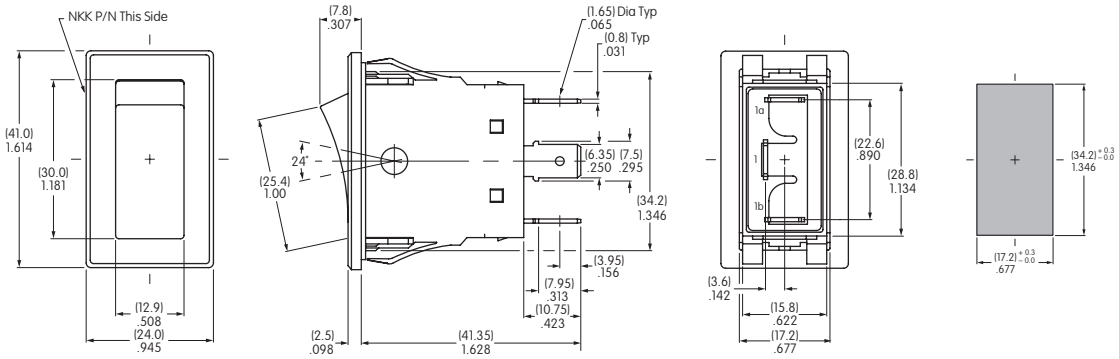

WR13AF

WR11 model does not have terminal 1.

Panel Thickness
.039″ ~ .157″
(1.0mm ~ 4.0mm)

Wire Lead Terminals

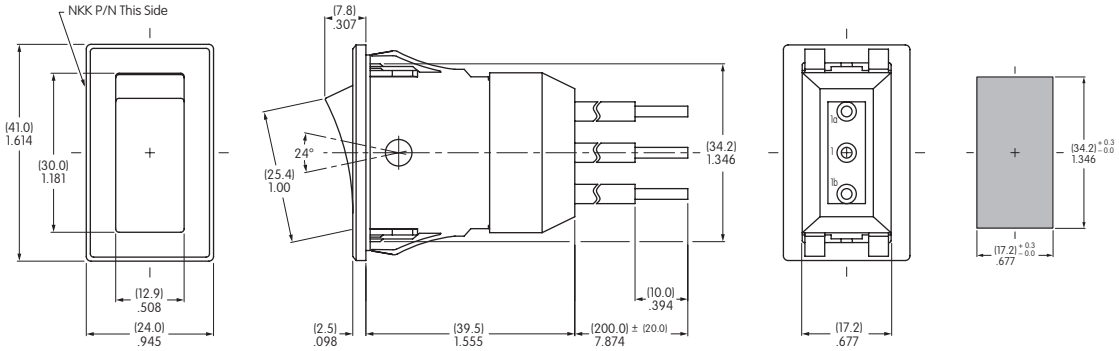

WR15BL

WR11 model does not have terminal 1.

Panel Thickness
.039″ ~ .157″
(1.0mm ~ 4.0mm)

STANDARD WIRE COLOR SCHEME

Wire leads are covered with heat resistant vinyl in accordance with UL 1015 and CSA TEW 105 Standards for Appliance Wiring Material (AWM).

Terminal Numbers & Wire Colors			
	1a	**1**	**1b**
WR11	Black		White
WR12-19	White	Black	Red

OUR CERTIFICATE

DiGi provide top-quality products and perfect service for customer worldwide through standardization, technological innovation and continuous improvement. DiGi through third-party certification, we striciy control the quality of products and services. Welcome your RFQ to Email: Info@DiGi-Electronics.com

Tel: +00 852-30501935

RFQ Email: Info@DiGi-Electronics.com

DiGi is a global authorized distributor of electronic components.