5-14-C Datasheet

DiGi Electronics Part Number	CSS35-14-C-DG
Manufacturer	Panduit Corp
Manufacturer Product Number	CSS35-14-C
Description	CONN TERM RECT LUG 4-14 AWG #1/4
Detailed Description	Terminal Connector Rectangular

https://www.DiGi-Electronics.com

This model CSS35-14-C is available at DiGi Electronics.

DiGi Electronics offers a global database of semiconductor and electronic component datasheets.

We welcome your inquiries regarding pricing, lead time, or other product-related questions.

Request a Quote

0 852-30

Datasheet Search

RFQ Email: Info@DiGi-Electronics.com

DiGi is a global authorized distributor of electronic components.

Purchase and inquiry

Manufacturer Product Number:	Manufacturer:
CSS35-14-C	Panduit Corp
Series:	Product Status:
-	Obsolete
Terminal Type:	Stud/Tab Size:
-	-
Terminal Style:	Tab Thickness:
-	-
Length - Overall:	Width - Outer Edges:
-	-
Mounting Type:	Termination:
-	-
Wire Gauge:	Insulation:
-	-
Features:	Color:
-	-
Contact Finish:	Contact Material:
-	-
Diameter - Barrel ID:	Diameter - Barrel OD:

DiGi is a global authorized distributor of electronic components.

CSS35-14-C Panduit Corp CONN TERM RECT LUG 4-14 AWG #1/4

THIS COPY IS PROVIDED ON A RESTRICTED BASIS AND IS NOT TO BE USED IN ANY WAY DETRIMENTAL TO THE INTERESTS OF PANDUIT CORP.

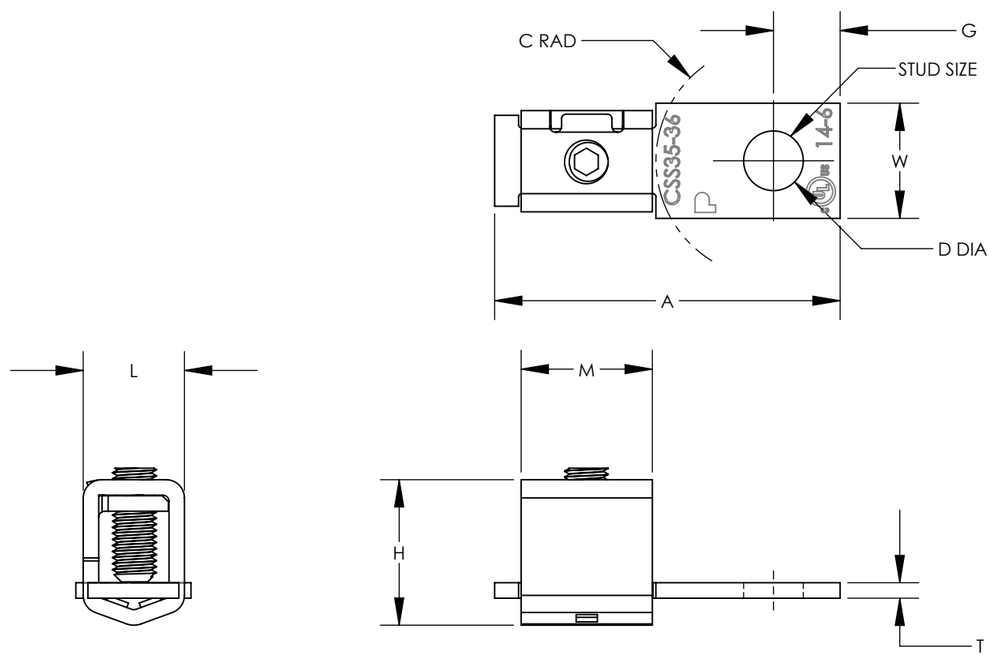

NOTES:

1. MATERIAL:
   BODY - COPPER
   SCREW - STEEL, ZINC PLATED
2. TWO PIECE FLOATING TONGUE ASSEMBLY.
3. cULus LISTED FOR USE UP TO 600V AND TEMPERATURE RATED 90°C
4. RATED FOR USE WITH COPPER STRANDED CODE CONDUCTOR ONLY
5. THESE PARTS ARE RoHS COMPLIANT
6. PKG. QTY.: L = 50
   C = 100

c UL us LISTED

PANDUIT PART NUMBER	STRANDED COPPER WIRE RANGE	SCREW TORQUE IN-LB [N.m]	STUD SIZE (IN)	DIMENSIONS - IN [mm] ± .03 [0.8]									SCREW STYLE
				D DIA	G	W	A	M	T	H	L	C (REF.)	
CSS35-36-C	14 AWG - 6 AWG	13 IN-LB [1.5 N.m]	3/16"	0.20 [5.0]	0.22 [5.6]	0.39 [9.9]	1.18 [30.0]	0.47 [11.9]	0.06 [1.5]	0.55 [14.0]	0.36 [9.1]	0.39 [9.9]	5/64" HEX SOCKET
CSS35-14-C	14 AWG - 6 AWG	13 IN-LB [1.5 N.m]	1/4"	0.26 [6.6]	0.26 [6.6]	0.50 [12.7]	1.24 [31.5]	0.47 [11.9]	0.06 [1.5]	0.55 [14.0]	0.36 [9.1]	0.41 [10.4]	5/64" HEX SOCKET
CSS70-14-L	8 AWG - 2 AWG	8 AWG = 20 IN-LB [2.3 N.m] 6 AWG = 23 IN-LB [2.6 N.m] 4-2 AWG = 35 IN-LB [4.0 N.m]	1/4"	0.26 [6.6]	0.25 [6.4]	0.50 [12.7]	1.53 [38.8]	0.53 [13.5]	0.08 [2.1]	0.65 [16.6]	0.46 [11.6]	0.58 [14.7]	1/8" HEX SOCKET

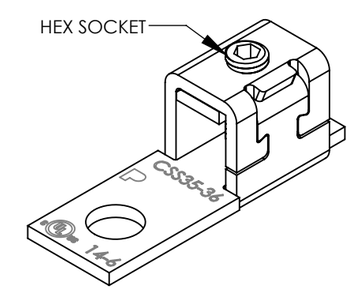

REV	DATE	BY	CHK	APR	DESCRIPTION	ECN
02	3/21	JHNU	TMR	JADE	REVISED PACKAGING CODE: CSS70-14-L WAS CSS70-14-C	098745
01	3/21	JHNU	TMR	JADE	CSS70-14-C RELEASED, CSS125-14-Q REMOVED	098721
00	10/20	JHNU	TMR	RGB	DRAWING RELEASED	089914

TITLE
CSS SERIES COPPER MECHANICAL LUGS
CUSTOMER DRAWING

ITEM REVISION NAME: 14J226CQ/02
DATASET FILE NAME: 14J226CQ-DC/02.SLDDRW

PANDUIT

UNLESS OTHERWISE SPECIFIED, DIMENSIONAL TOLERANCES ARE: IN [mm]
.X ± .XXX ±
.XX ± ANGLES ±
THIRD ANGLE PROJECTION

MATERIAL: SEE NOTES

DRAWING NUMBER: 14J226CQ-DC

DRAWN BY: JHNU | DATE: 10/20 | CHK: RGB | SCALE: N/A | SHEET 1 OF 1 | SIZE: B

OUR CERTIFICATE

DiGi provide top-quality products and perfect service for customer worldwide through standardization, technological innovation and continuous improvement. DiGi through third-party certification, we striciy control the quality of products and services. Welcome your RFQ to Email: Info@DiGi-Electronics.com

Tel: +00 852-30501935

RFQ Email: Info@DiGi-Electronics.com

DiGi is a global authorized distributor of electronic components.