PT381 Datasheet

DiGi Electronics Part Number	PT381-DG
Manufacturer	Sharp Microelectronics
Manufacturer Product Number	PT381
Description	SENSOR PHOTO 800NM TOP VIEW T1
Detailed Description	Phototransistors 800nm Top View T-1

https://www.DiGi-Electronics.com

This model PT381 is available at DiGi Electronics.

DiGi Electronics offers a global database of semiconductor and electronic component datasheets.

We welcome your inquiries regarding pricing, lead time, or other product-related questions.

Request a Quote

Datasheet Search

Tel: +00 852-30501935

RFQ Email: Info@DiGi-Electronics.com

DiGi is a global authorized distributor of electronic components.

Purchase and inquiry

Manufacturer Product Number:	Manufacturer:
PT381	Sharp Microelectronics
Series:	Product Status:
-	Obsolete
Voltage - Collector Emitter Breakdown (Max):	Current - Collector (Ic) (Max):
35 V	20 mA
Current - Dark (Id) (Max):	Wavelength:
100 nA	800nm
Viewing Angle:	Power - Max:
40°	75 mW
Mounting Type:	Orientation:
Through Hole	Top View
Operating Temperature:	Package / Case:
-25°C ~ 85°C (TA)	T-1

Environmental & Export classification

RoHS Status:	Moisture Sensitivity Level (MSL):
RoHS non-compliant	1 (Unlimited)
ECCN:	HTSUS:
EAR99	8541.49.7080

DiGi is a global authorized distributor of electronic components.

PT380/PT380F PT381/PT381F

High Sensitivity, ϕ3mm Resin Mold Type Phototransistor

■ Features

1. High sensitivity
   (I_C : MIN.160μA at E_V = 100lx, **PT380**)
   (I_C : MIN.120μA at E_V = 2lx, **PT381**)
2. Compact ϕ3mm resin mold package
3. Intermediate acceptance (Δθ : TYP. ± 20˚)
4. Visible light cut-off type : **PT380F / PT381F**

■ Model Line-ups

	Single photo-transistor output	Darlington photo-transistor output
No visible light cut-off filter	**PT380**	**PT381**
Built-in visible light cut-off filter	**PT380F**	**PT381F**

■ Applications

1. Floppy disk drives
2. Optoelectronic switches
3. Infrared applied systems

■ Outline Dimensions (Unit : mm)

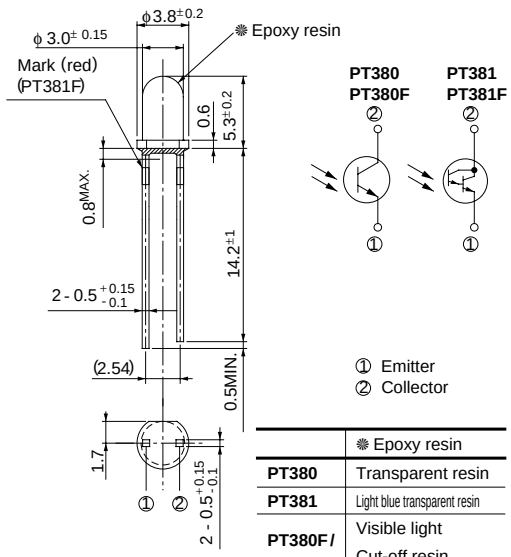

	Epoxy resin
PT380	Transparent resin
PT381	Light blue transparent resin
PT380F / PT381F	Visible light Cut-off resin (black)

■ Absolute Maximum Ratings (Ta = 25˚C)

Parameter	Symbol	Rating	Unit
Collector-emitter voltage	V_{CEO}	35	V
Emitter-collector voltage	V_{ECO}	6	V
Collector current	I_C	20	mA
Collector power dissipation	P_C	50	mW
Operating temperature	T_{opr}	- 25 to + 85	˚C
Storage temperature	T_{stg}	- 40 to + 85	˚C
*1 Soldering temperature	T_{sol}	260	˚C

*1 For 3 seconds at the position of 1.4mm from the bottom face of resin package

" In the absence of confirmation by device specification sheets, SHARP takes no responsibility for any defects that occur in equipment using any of SHARP's devices, shown in catalogs, data books, etc. Contact SHARP in order to obtain the latest version of the device specification sheets before using any SHARP's device. "

■ Electro-optical Characteristics

(Ta = 25˚C)

Parameter		Symbol	Conditions	MIN.	TYP.	MAX.	Unit
*2Collector current	PT380	I_C	E_V = 100lx, V_{CE} = 5V	0.16	-	1.17	mA
	PT380F			0.095	-	0.90	
	PT381		E_V = 2lx, V_{CE} = 10V	0.12	-	1.5	
	PT381F			0.07	-	1.08	
Collector dark current	PT380 / PT380F	I_{CEO}	E_e = 0, V_{CE} = 20V	-	-	0.1	μA
	PT381 / PT381F		E_e = 0, V_{CE} = 10V	-	-	1.0	
*2Collector-emitter saturation voltage	PT380 / PT380F	$V_{CE(sat)}$	E_e = 10mW/cm^2, I_C = 0.5mA	-	0.2	0.4	V
	PT381 / PT381F		E_e = 1mW/cm^2, I_C = 2.5mA	-	-	1.0	
Collector-emitter breakdown voltage		BV_{CEO}	I_C = 0.1mA, E_e = 0	35	-	-	V
Emitter-Collector breakdown voltage		BV_{ECO}	I_C = 0.01mA, E_e = 0	6	-	-	V
Peak sensitivity wavelength	PT380 / PT381	λ_P	-	-	800	-	nm
	PT380F / PT381F			-	860	-	
Response time: Rise time	PT380 / PT380F	t_r	V_{CE} = 20V, I_C= 1mA, R_L = 1kΩ	-	10	40	μs
	PT381 / PT381F		V_{CE} = 2V, I_C = 10mA, R_L = 100Ω	-	100	400	
Response time: Fall time	PT380 / PT380F	t_f	V_{CE} = 20V, I_C = 1mA, R_L = 1kΩ	-	8	35	
	PT381 / PT381F		V_{CE} = 2V, I_C = 10mA, R_L = 100Ω	-	100	400	
Half intensity angle		Δθ	-	-	±20	-	°

*2 E_V, E_e : Illuminance, irradiance by CIE standard light source A (tungsten lamp)

Fig. 1 Collector Power Dissipation vs. Ambient Temperature

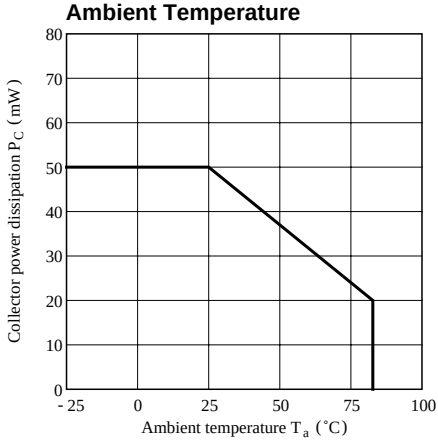

Fig. 2-a Collector Dark Current vs. Ambient Temperature (PT380/PT380F)

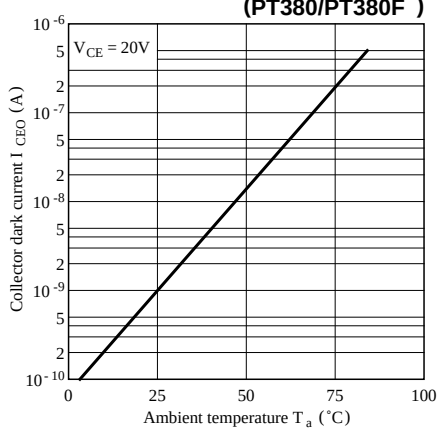

Fig. 2-b Collector Dark Current vs. Ambient Temperature (PT381/381F)

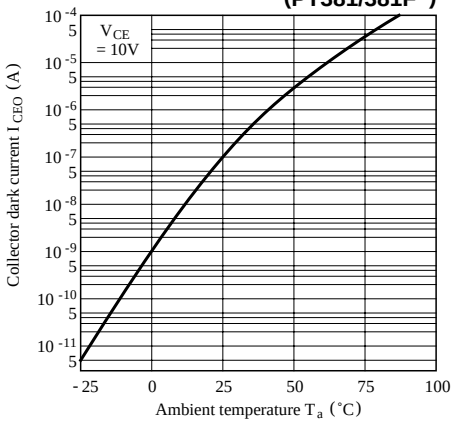

Fig. 3-a Relative Collector Current vs. Ambient Temperature (PT380/PT380F)

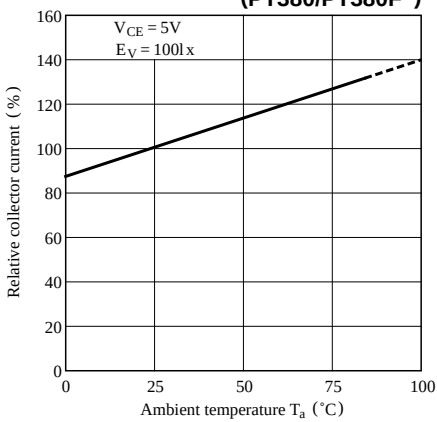

Fig. 3-b Relative Collector Current vs. Ambient Temperature (PT381/PT381F)

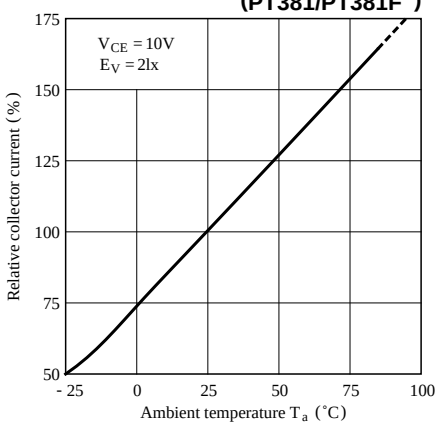

Fig. 4-a Collector Current vs. Irradiance (PT380/380F)

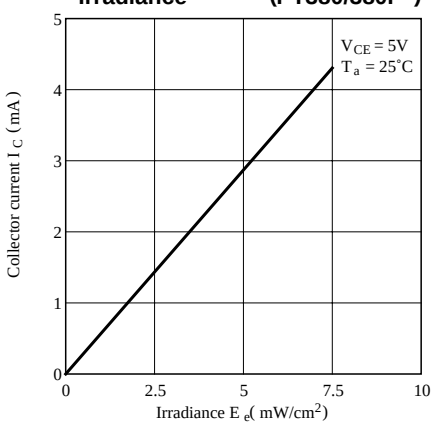

Fig. 4-b Collector Current vs. Irradiance (PT381/PT381F)

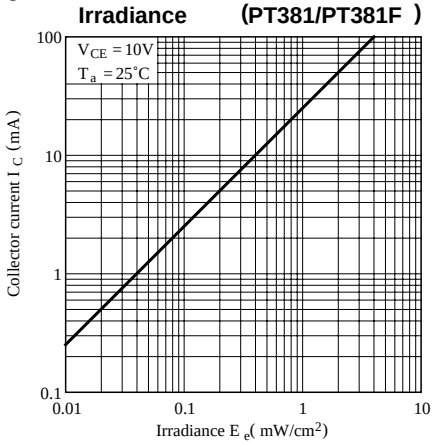

Fig. 5-a Collector Current vs. Collector-emitter Voltage (PT380/380F)

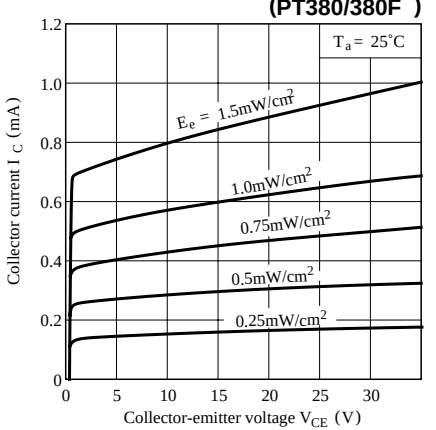

Fig. 5-b Collector Current vs. Collector-emitter Voltage (PT381/381F)

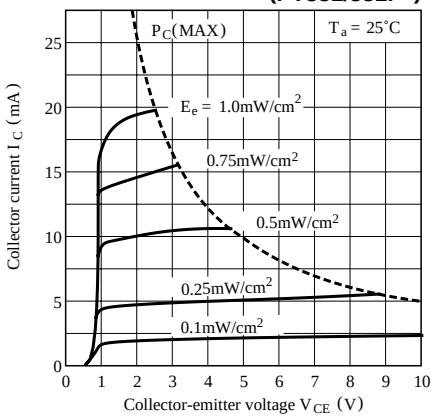

Fig. 6 Spectral Sensitivity

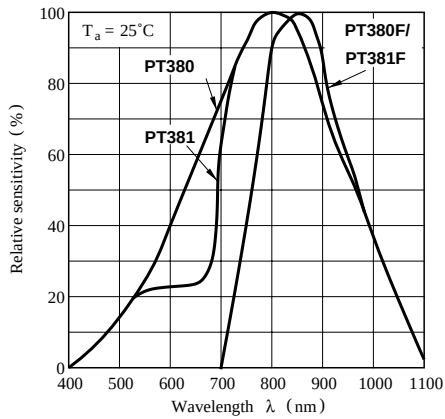

Fig. 7-a Response Time vs. Load Resistance (PT380/PT380F)

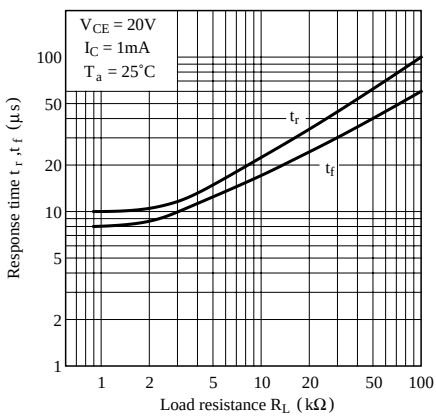

Test Circuit for Response Time

(PT380/PT380F)

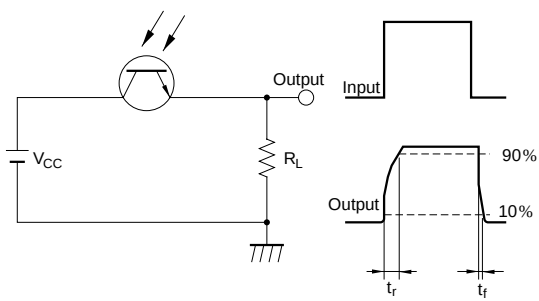

Fig. 7-b Response Time vs. Load Resistance (PT381/381F)

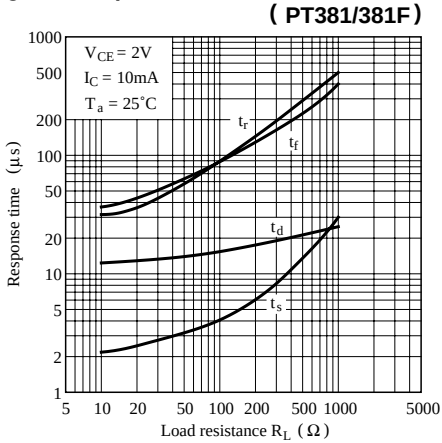

Test Circuit for Response Time

(PT381/PT381F)

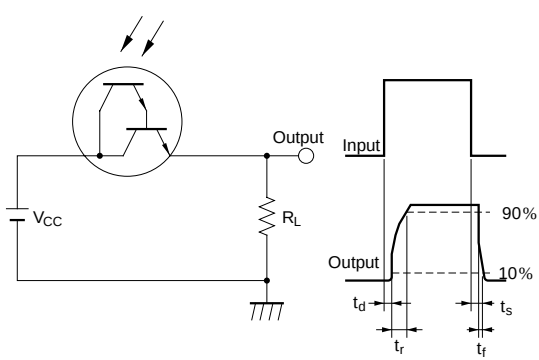

Fig. 8-a Collector-emitter Saturation Voltage vs. Irradiance (PT380/380F)

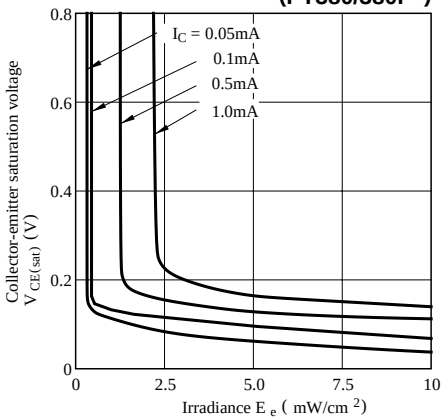

Fig. 8-b Collector-emitter Saturation Voltage vs. Irradiance (PT381/381F)

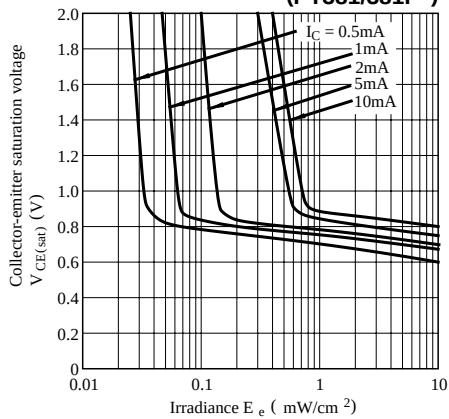

Fig. 9 Sensitivity Diagram (T_a= 25˚C)

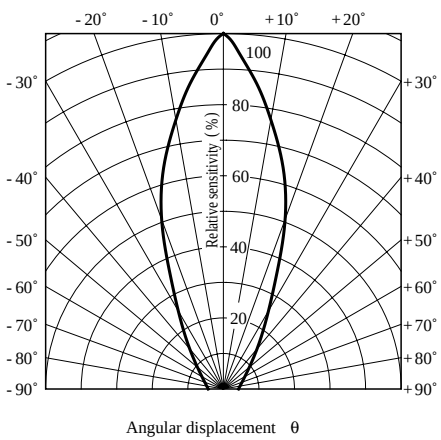

Fig.10 Relative Collector Current vs. Distance to Emitter (Emitter:GL380/GL381)

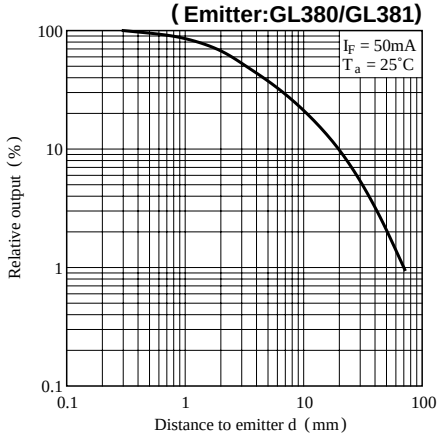

Please refer to the chapter " Precautions for Use."

NOTICE

- The circuit application examples in this publication are provided to explain representative applications of SHARP devices and are not intended to guarantee any circuit design or license any intellectual property rights. SHARP takes no responsibility for any problems related to any intellectual property right of a third party resulting from the use of SHARP's devices.
- Contact SHARP in order to obtain the latest device specification sheets before using any SHARP device. SHARP reserves the right to make changes in the specifications, characteristics, data, materials, structure, and other contents described herein at any time without notice in order to improve design or reliability. Manufacturing locations are also subject to change without notice.
- Observe the following points when using any devices in this publication. SHARP takes no responsibility for damage caused by improper use of the devices which does not meet the conditions and absolute maximum ratings to be used specified in the relevant specification sheet nor meet the following conditions:

(i) The devices in this publication are designed for use in general electronic equipment designs such as:
– Personal computers
– Office automation equipment
– Telecommunication equipment [terminal]
– Test and measurement equipment
– Industrial control
– Audio visual equipment
– Consumer electronics

(ii) Measures such as fail-safe function and redundant design should be taken to ensure reliability and safety when SHARP devices are used for or in connection with equipment that requires higher reliability such as:
– Transportation control and safety equipment (i.e., aircraft, trains, automobiles, etc.)
– Traffic signals
– Gas leakage sensor breakers
– Alarm equipment
– Various safety devices, etc.

(iii) SHARP devices shall not be used for or in connection with equipment that requires an extremely high level of reliability and safety such as:
– Space applications
– Telecommunication equipment [trunk lines]
– Nuclear power control equipment
– Medical and other life support equipment (e.g., scuba).

- Contact a SHARP representative in advance when intending to use SHARP devices for any "specific" applications other than those recommended by SHARP or when it is unclear which category mentioned above controls the intended use.
- If the SHARP devices listed in this publication fall within the scope of strategic products described in the Foreign Exchange and Foreign Trade Control Law of Japan, it is necessary to obtain approval to export such SHARP devices.
- This publication is the proprietary product of SHARP and is copyrighted, with all rights reserved. Under the copyright laws, no part of this publication may be reproduced or transmitted in any form or by any means, electronic or mechanical, for any purpose, in whole or in part, without the express written permission of SHARP. Express written permission is also required before any use of this publication may be made by a third party.
- Contact and consult with a SHARP representative if there are any questions about the contents of this publication.

OUR CERTIFICATE

DiGi provide top-quality products and perfect service for customer worldwide through standardization, technological innovation and continuous improvement. DiGi through third-party certification, we striciy control the quality of products and services. Welcome your RFQ to Email: Info@DiGi-Electronics.com

Tel: +00 852-30501935

RFQ Email: Info@DiGi-Electronics.com

DiGi is a global authorized distributor of electronic components.