SMTL2-OC Datasheet

https://www.DiGi-Electronics.com

DiGi Electronics Part Number	SMTL2-OC-DG
Manufacturer	Bivar Inc.
Manufacturer Product Number	SMTL2-OC
Description	LED ORANGE CLEAR 2PLCC SMD
Detailed Description	Orange 605nm LED Indication - Discrete 1.9V 2-PLCC

Tel: +00 852-30501935

RFQ Email: Info@DiGi-Electronics.com

DiGi is a global authorized distributor of electronic components.

Purchase and inquiry

Manufacturer Product Number:	Manufacturer:
SMTL2-OC	Bivar Inc.
Series:	Product Status:
-	Active
Color:	Configuration:
Orange	Standard
Lens Color:	Lens Transparency:
Colorless	Clear
Millicandela Rating:	Lens Style:
270mcd	Round with Flat Top
Lens Size:	Voltage - Forward (Vf) (Typ):
-	1.9V
Current - Test:	Viewing Angle:
20mA	120°
Mounting Type:	Wavelength - Dominant:
Surface Mount	605nm
Wavelength - Peak:	Features:
-	-
Package / Case:	Supplier Device Package:
2-PLCC	2-PLCC
Size / Dimension:	Height (Max):
3.20mm L x 2.80mm W	2.10mm
Base Product Number:	
SMTL2	

Environmental & Export classification

RoHS Status:	Moisture Sensitivity Level (MSL):
ROHS3 Compliant	4 (72 Hours)
ECCN:	HTSUS:
EAR99	8541.41.0000

PLCC2 SMD Top View Package LED SMTL2-OC, ORANGE

SMTL2-OC

- **Industry Standard PLCC2 Footprint**
- **Low Profile Package**
- **High Luminous Intensity**
- **Wide Viewing Angle**
- **High Power Efficiency**

Bivar SMTL2 LED is offered in an industry standard PLCC2 package with high luminous intensity and wide viewing angles. The miniature package is ideal for small scale applications such as illumination, general indication, and backlighting. Low power consumption and excellent long life reliability are suitable for battery powered equipment. The robust package is ideal for harsh working environments and can be used in clusters for high luminous applications. Wide variety of color and intensity combinations are available to meet any illumination needs. Bivar SMTL2 LED is packaged in standard tape and reels for pick and place assemblies.

Part Number	Material	Emitted Color	Lumen Typ. mcd	Lens Color	Viewing Angle
SMTL2-OC	AlGaInP	Orange	270	Water Clear	120°

Outline Dimensions

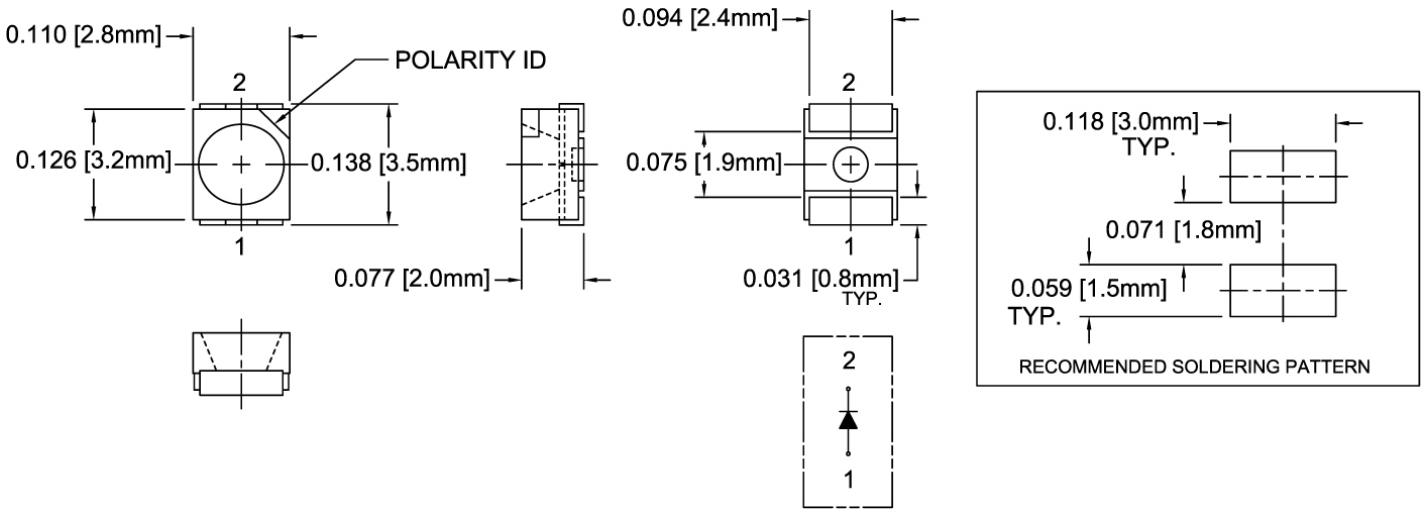

Outline Drawings Notes:
1. All dimensions are in inches [millimeters].
2. Standard tolerance: ±0.010" unless otherwise noted.

ATTENTION OBSERVE PRECAUTIONS FOR HANDLING ELECTROSTATIC SENSITIVE DEVICES

RoHS Compliant

Moisture Sensitivity Levels 4

Bivar reserves the right to make changes at any time without notice.

PLCC2 SMD Top View Package LED SMTL2-OC, ORANGE

BIVAR

Absolute Maximum Ratings

T_A = 25°C unless otherwise noted

Power Dissipation	72 mW
Continuous Forward Current	30 mA
Peak Forward Current [1]	100 mA
Reverse Voltage	5 V
Derating Linear From 25°C	0.4 mA/°C
Operating Temperature Range	-40 ~ +85°C
Storage Temperature Range	-40 ~ +100°C
Lead Soldering Temperature (1.6 mm from body) [2]	260°C
Electrostatic Discharge (HBM)	2000 V

Notes: 1. 10% Duty Cycle, Pulse Width ≤ 0.1 msec.
2. Solder time less than 5 seconds at temperature extreme.

Electrical Characteristics

T_A = 25°C & I_F = 20 mA unless otherwise noted

Emitting Color	Forward Voltage (V)[1]		Recommend Forward Current (mA)	Reverse Current (μA) V_R=5V	Dominant Wavelength (nm)[2]			Luminous Intensity (mcd)[3]		Viewing Angle 2 Θ ½ (deg)
	TYP	MAX	TYP	MAX	MIN	TYP	MAX	MIN	TYP	TYP
Orange	1.9	2.4	20	100	598	605	614	180	270	120

Notes: 1. Tolerance of Forward Voltage : ±0.05V.
2. Tolerance of Dominant Wavelength : ±0.1nm.
3. Tolerance of Luminous Intensity : ±15%.

Directivity Radiation

T_A = 25°C unless otherwise noted

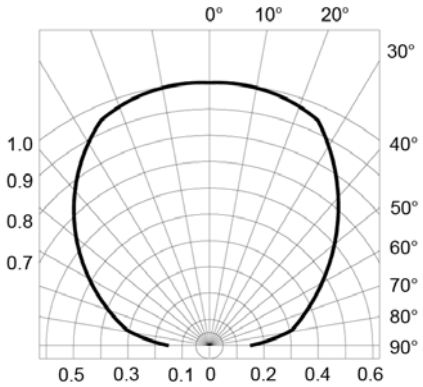

Radiation Diagram

PLCC2 SMD Top View Package LED SMTL2-OC, ORANGE

Typical Electrical / Optical Characteristics Curves

T_A = 25°C unless otherwise noted

Relative Spectrum Emission I_{rel} = f (l), T_A = 25°C , I_F = 20 mA
V(l) = Standard eye response curve

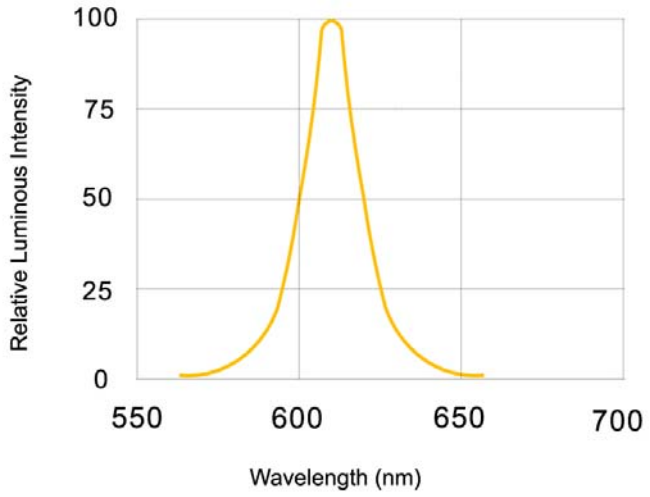

Fig.1 Relative Luminous Intensity vs. Wavelength

Forward Current I_F = f (V_F)
T_A = 25°C

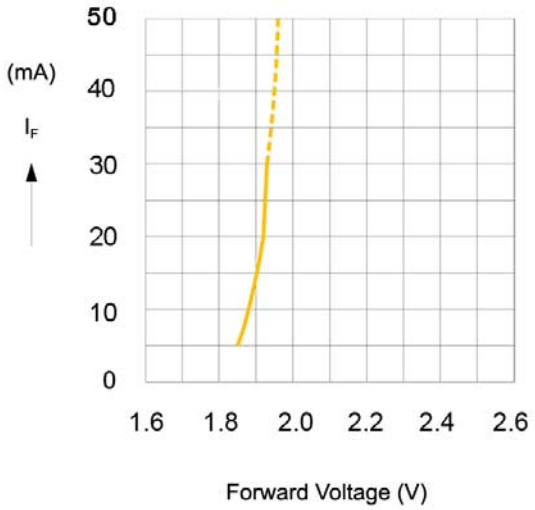

Fig.2 Forward Current vs. Forward Voltage

Relative Luminous Intensity I_V/I_V (20 mA) = f (I_F)
T_A = 25°C

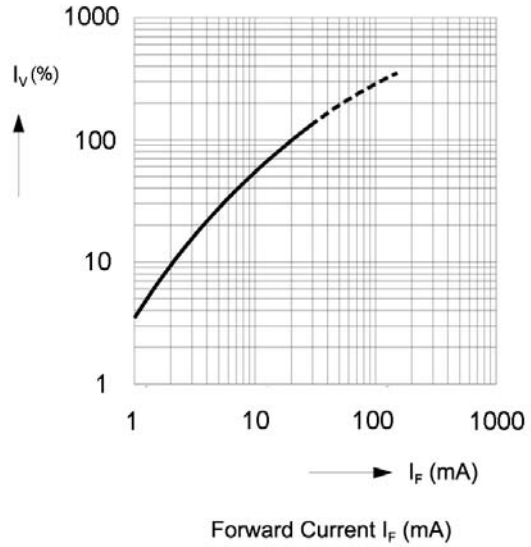

Fig.3 Relative Luminous Intensity vs. Forward Current

Ambient Temperature vs. Allowable Forward Current

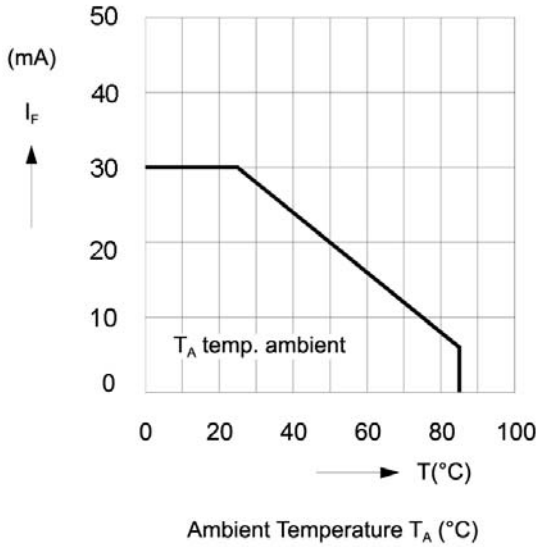

Fig.4 Forward Current vs. Ambient Temperature

PLCC2 SMD Top View Package LED SMTL2-OC, ORANGE

Recommended Soldering Conditions

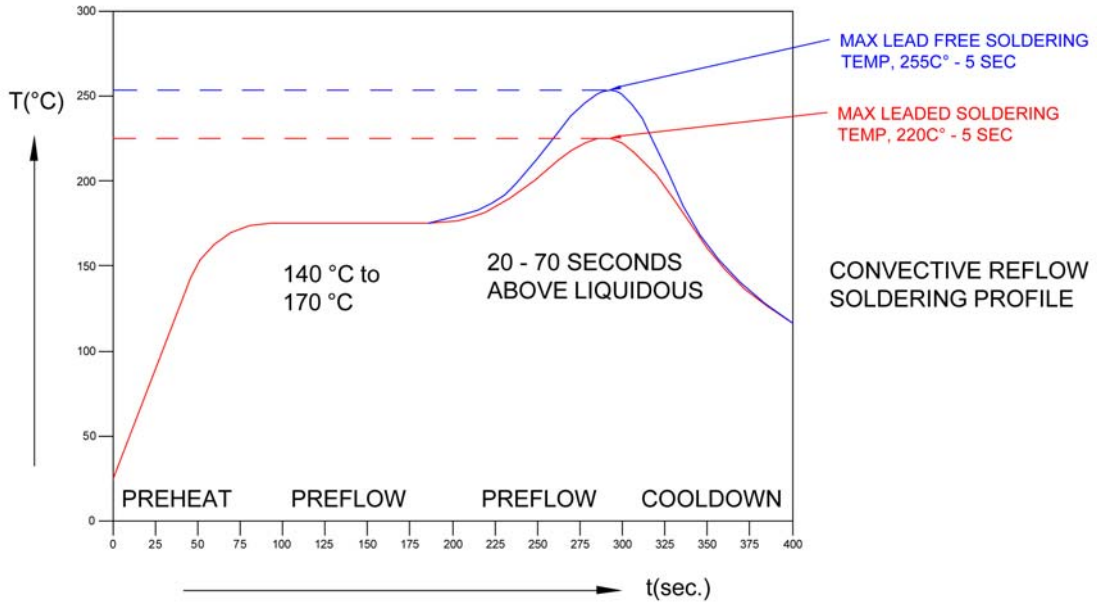

Tape and Reel Dimensions

Note: 2000 pcs/Reel

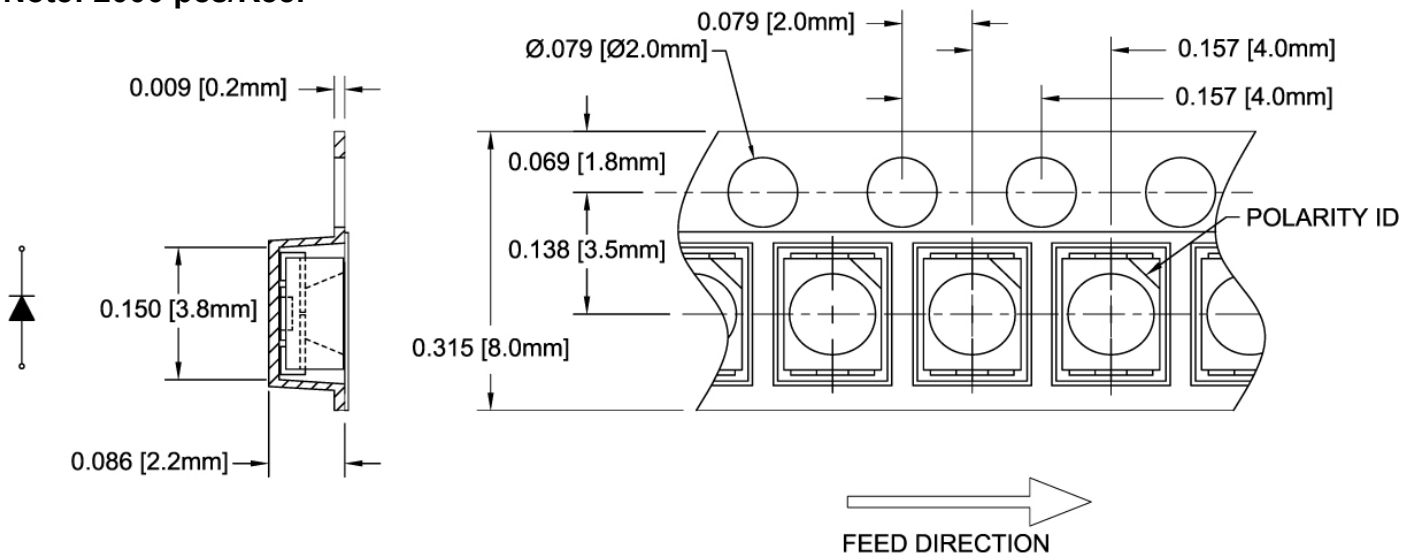

Outline Drawings Notes:
1. All dimensions are in inches [millimeters].
2. Standard tolerance: ±0.010" unless otherwise noted.

Bivar reserves the right to make changes at any time without notice.

PLCC2 SMD Top View Package LED SMTL2-OC, ORANGE

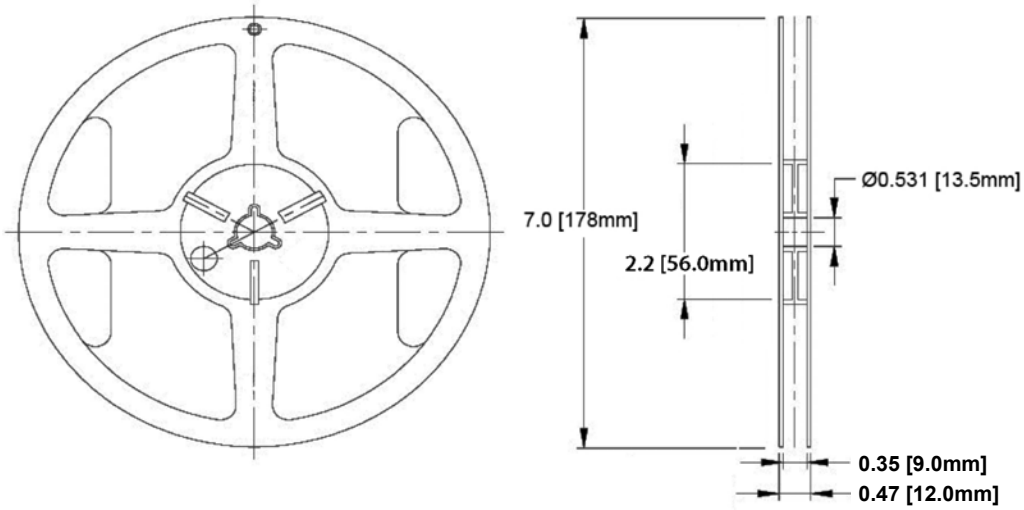

Outline Drawings Notes:
1. All dimensions are in inches [millimeters].
2. Standard tolerance unless otherwise noted: X.XXX ± 0.010"
   X.X ± 0.1"

Packaging and Labeling Plan

Note: 1 Reel / Bag

Sealed ESD and Moisture Barrier Bag

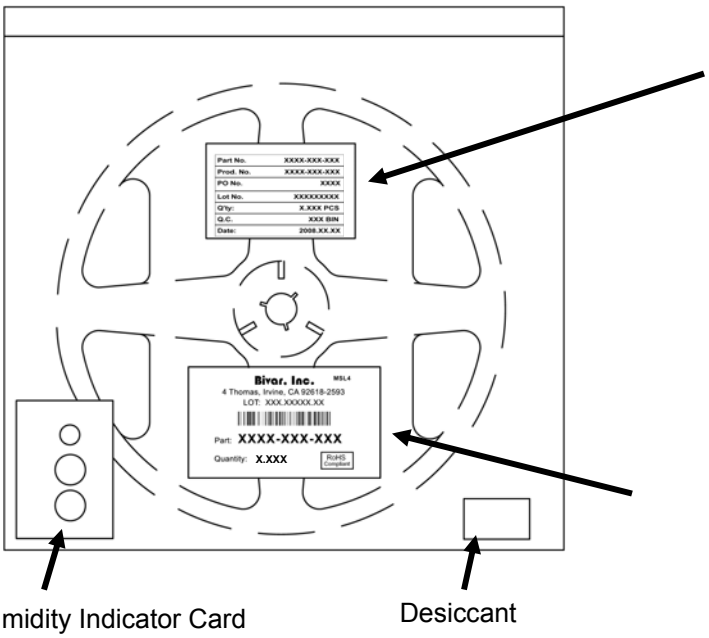

Part No.	XXXX-XXX-XXX
Prod. No.	XXXX-XXX-XXX
PO No.	XXXX
Lot No.	XXXXXXXXX
Q'ty:	X.XXX PCS
Q.C.	XXX BIN
Date:	2008.XX.XX

Internal Quality Control Label

Bivar Standard Packaging Label

OUR CERTIFICATE

DiGi provide top-quality products and perfect service for customer worldwide through standardization, technological innovation and continuous improvement. DiGi through third-party certification, we striciy control the quality of products and services. Welcome your RFQ to Email: Info@DiGi-Electronics.com

Tel: +00 852-30501935

RFQ Email: Info@DiGi-Electronics.com

DiGi is a global authorized distributor of electronic components.